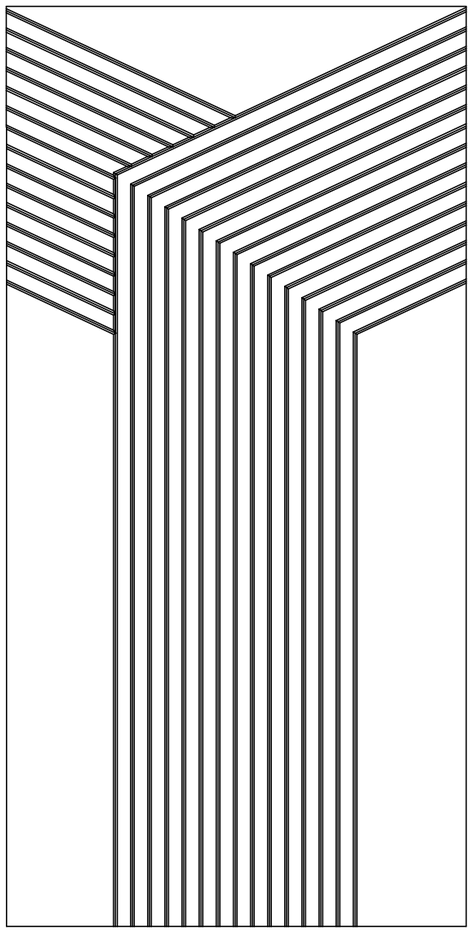

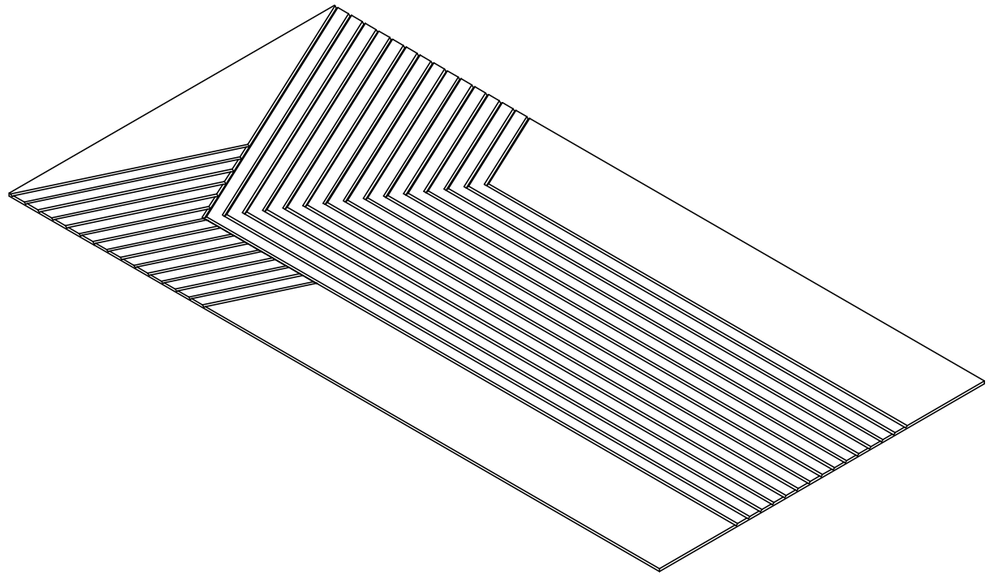

FELTIVE

TITLE			UNITS	PROJ. ANG.	SIZE	SCALE	LAST UPDATED
Cascade			mm		A3	1:16	01/06/26