

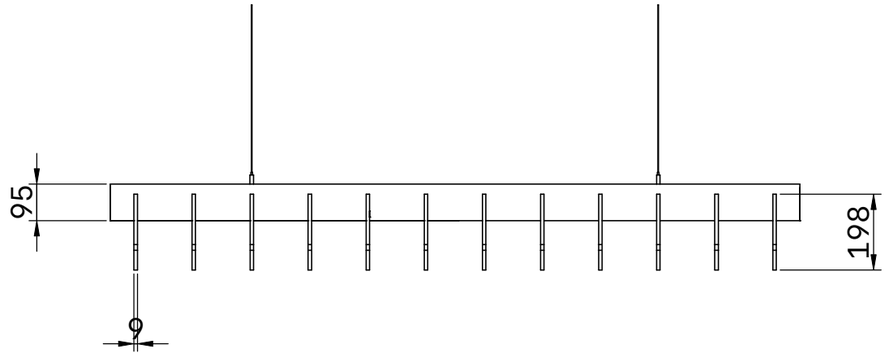

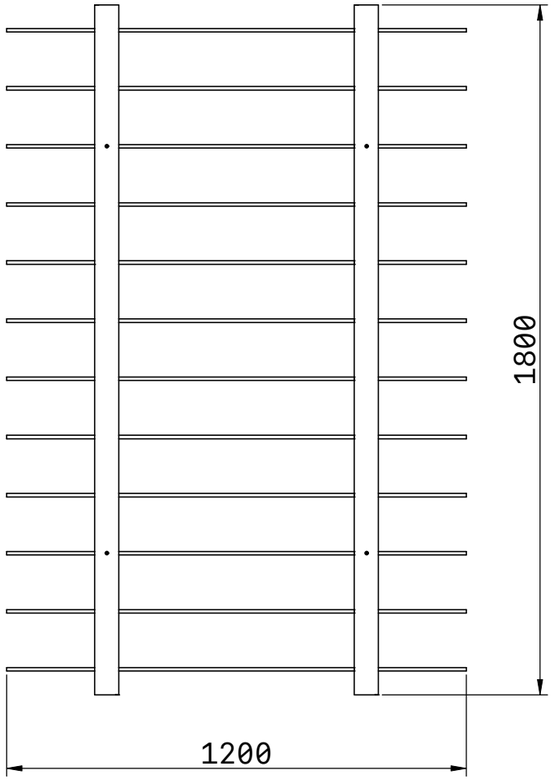

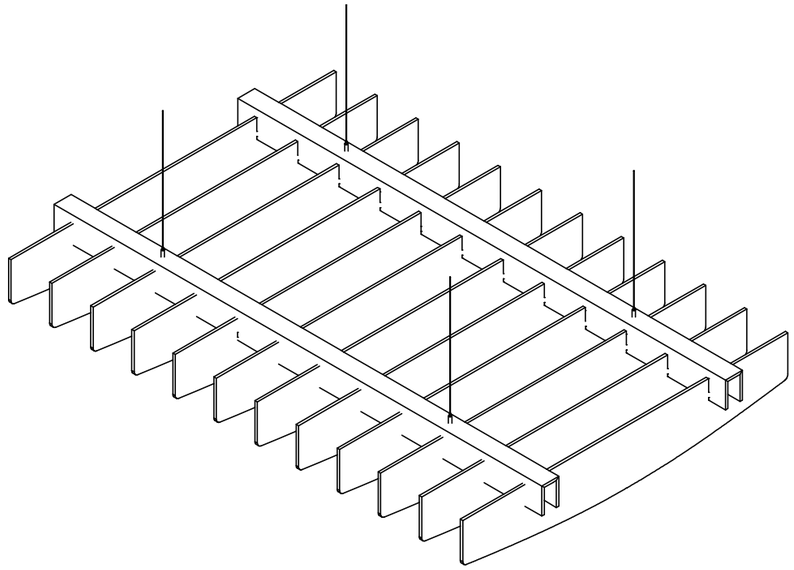

FELTIVE

TITLE	SIZE BAFFLE		UNITS	PROJ. ANG.	SIZE	SCALE	LAST UPDATED
Premium Linear Straight	1800mm		mm		A3	1:16	01/20/26